duragutter®
Classic Forms - Modern Engineering

INSTALLATION GUIDE: SQ, TL PROFILES



OVERVIEW

Duragutter is an engineered system with easy to follow, step-by-step instructions.

Installers must review both this installation guide and the installation videos prior to installation.

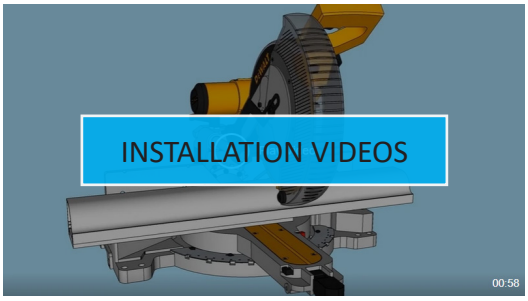

TABLE OF CONTENTS

General Installation Notes....2
Cold Weather Installation....3
Cutting and Joining Duragutter....4-9
Installing Outlets....10
Installing End Caps and Internal Plugs....11-12
Attaching Gutter to Fascia....13
Installing Integral Flashing....14
Installing Leaf Guard....14-15

Specialized Tools Required for Installation

- 12” sliding compound miter saw with minimum 80 tooth blade
- Bar clamp (minimum 7” throat depth) and miter clamp - we can include both in your order
- 7/16” drill bit
- 3” carbide hole saw (for 3” round outlet) or jigsaw with metal cutting blade (for rectangular outlets)

General Installation Notes

1. Plan the work sequence. Always make inside miters before outside miters.
2. Use only glues and sealants supplied or approved by Duragutter. Do not allow glue or sealant to freeze.
3. When working with short lengths, it may be easier to assemble joints at waist level and then lift the assembled unit into place.
4. Use eye and ear protection when cutting Duragutter. Use dust collection or cut over a tarp or sweepable surface.

Expansion Joints

Aluminum expands and contracts as a function of temperature. Yearly temperature ranges vary per climate zone. For example, Boston has a typical yearly temperature range of 80° F. Expansion joints may be required at butt joints on runs that exceed 25'. Expansion joints are never used at miters.

Making Expansion Joints:

Follow the instructions below for "Joining straight section (butt joints)". However, **glue the pins into only one of the two pieces being joined,** to allow for movement. The provided sealing tape is designed to absorb movement and is essential to the watertightness of joints. Do not substitute other tapes or sealants.

Sizing Expansion Joints:

Use the chart below to determine expansion gaps at butt joints for your location.

If gutters are installed at the peak of the temperature range, do not use expansion joints. If gutters are installed at the lowest point of the temperature range, use the numbers listed below. If they are installed somewhere in the mid-temperature range, size the joint based on where that temperature fits in the range.

Yearly low to high temperature range (location specific)	**Light colored gutter:** Expansion gap per 25' run, at butt joints:	**Dark colored gutter:** Expansion gap per 25' run, at butt joints:
Under 40° F temperature range (stable year-round climate)	Not required	Not required
40° F temperature range	1/16"	1/8"
60° F temperature range	1/8"	3/16"
80+° F temperature range	3/16"	5/16"

NEXT: COLD WEATHER INSTALLATION

Cold Weather Installation

Follow these steps when installing below 32° F / 0° C. Glue, tape and sealant will not bond properly to cold or frosted gutter. **Do not install in temperatures below 20° F / -6° C, in rain or snow, or if frost keeps forming on gutter after heating.**

Keeping Materials Warm:

- Store 2P-10 Adhesive, 2P-10 Activator, sealant and tape kits indoors overnight. Do not allow glue or sealant to freeze.
- On site, keep materials warm until use. Bring out only what is needed for the next joint.
- Do not warm containers with a heat gun or flame. Activator cans can burst if overheated.

Preparing Joints:

- Where possible, assemble joints, outlets and end caps in a heated space, then lift the assembled unit into place.
- Warm both sides of the joint with a heat gun to remove frost and moisture. Keep the heat gun moving to avoid damaging the finish. Gutter should feel warm to the touch, not hot.
- Clean with acetone rag. Do not use the heat gun again until acetone has fully evaporated.
- If frost forms again during application, reheat gutter before continuing.

Gluing:

- Always use 2P-10 Activator in cold weather. Without Activator, glue cures very slowly in the cold.
- Glue and spray pins with Activator as shown in the joining instructions.

Taping:

- Ensure tape area is warm and dry before applying tape.
- Apply a small amount of 2P-10 Adhesive under edges of tape.
- Apply firm pressure with fingers along all tape edges.

Applying Sealant:

- Replace sealant tube with a warm one as soon as it becomes hard to apply.
- Sealant cures slowly in cold weather. Do not apply sealant if rain or snow is expected within 24 hours.

Expansion Joints:

- Gutters installed in cold weather are near the low point of the yearly temperature range. Use the full expansion gaps shown in the Expansion Joints chart.

NEXT: CUTTING DURAGUTTER

Cutting Duragutter

1

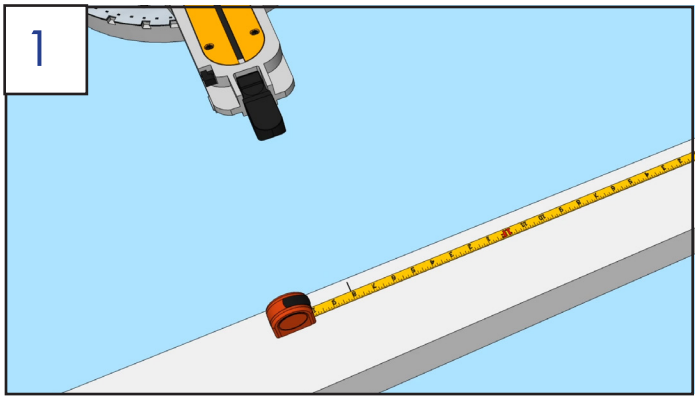

- Use a 12” sliding miter saw with a minimum 80 tooth blade.
- Measure and mark piece.

2

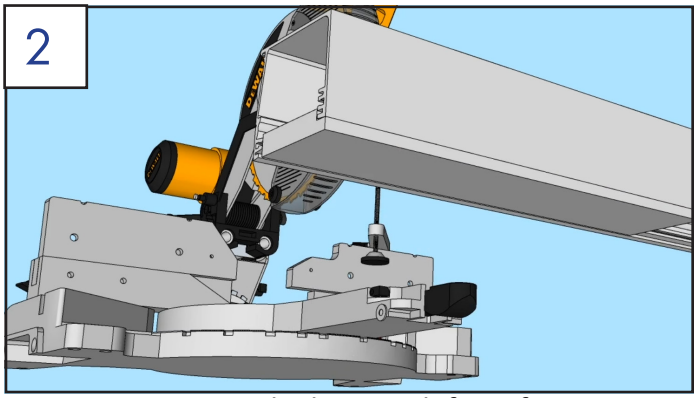

- Cut gutter upside down with front facing forwards.
- Insert supplied wooden block to raise front edge of gutter and prevent deformation of gutter shape when clamping.

3

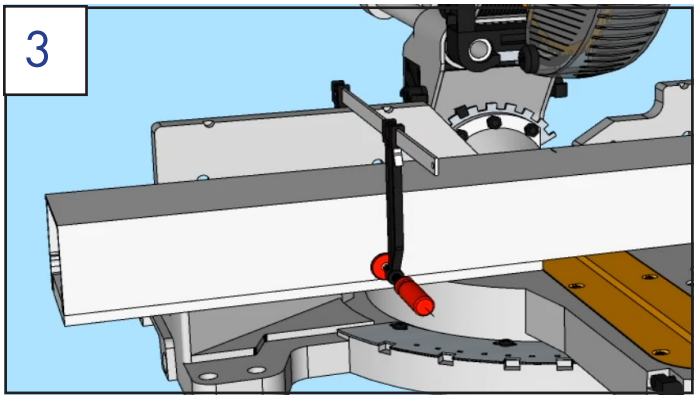

- Clamp front of gutter to saw fence - keep hands off gutter when cutting.
- To make a small piece, cut it off of a large piece. Do not try to clamp pieces smaller than 15”.

4

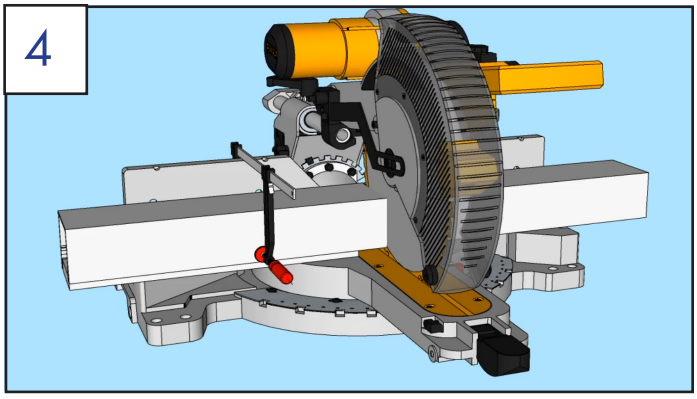

- Cut slow and steady - 10 seconds per cut. Fast cuts risk kickback and rough edges.
- Make miter cuts the same way. Ensure clamp is out of the way of the cut.

NEXT: JOINING STRAIGHT SECTIONS

Joining Straight Sections (Butt Joints)

1

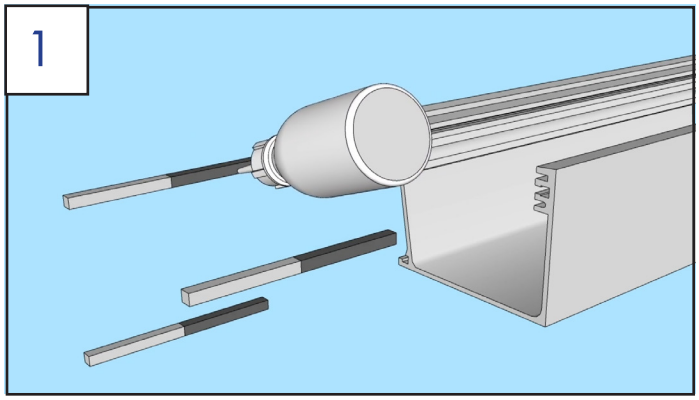

- Test fit the joint to ensure accuracy before installing pins.
- Apply 2P-10 Adhesive to one half of 3 straight pins. Slide the pins halfway into the pin grooves on gutter.

2

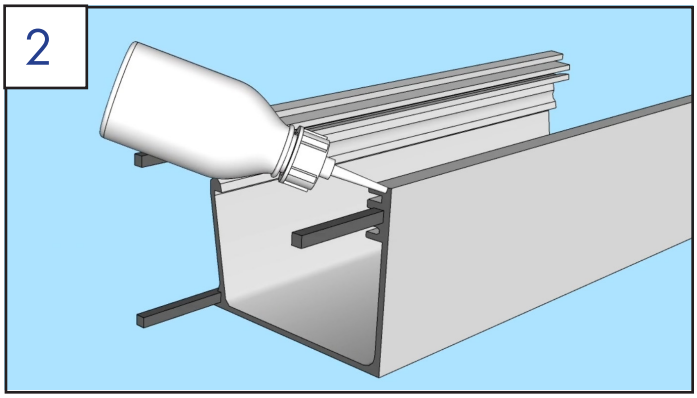

- Apply 2P-10 Adhesive to other half of pins and the edge of one gutter. Slide joint together.
- Clean any excess glue from outside surface of gutter with acetone rag immediately.
- Before applying tape, ensure gutter is clean and dry. Clean with acetone rag if necessary.

3

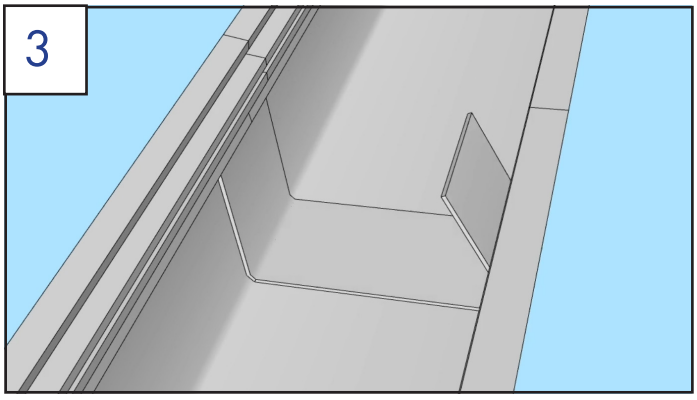

- Use tape labeled “BUTT JOINT”.
- Apply pre-cut tape over joint. Peel a small amount of tape backing at a time, carefully stick tape, and apply pressure with fingers to remove any air bubbles.
- If temperature is below 35° F / 1.6° C, apply a small amount of 2P-10 Adhesive under edges of tape.

4

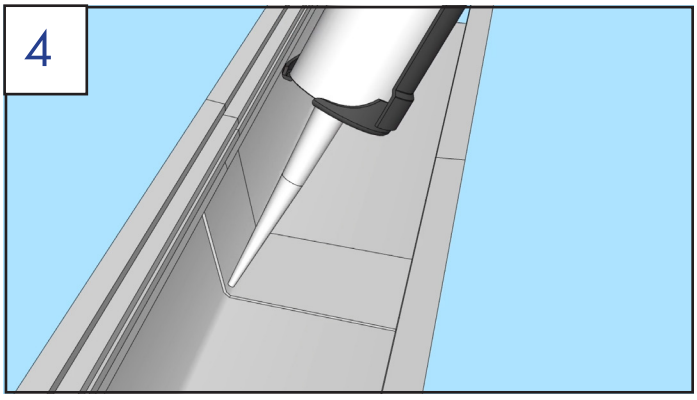

- Apply sealant in the grooves above the tape, and over the sides of the tape.

NEXT: INSIDE MITERS

Making Inside Miters

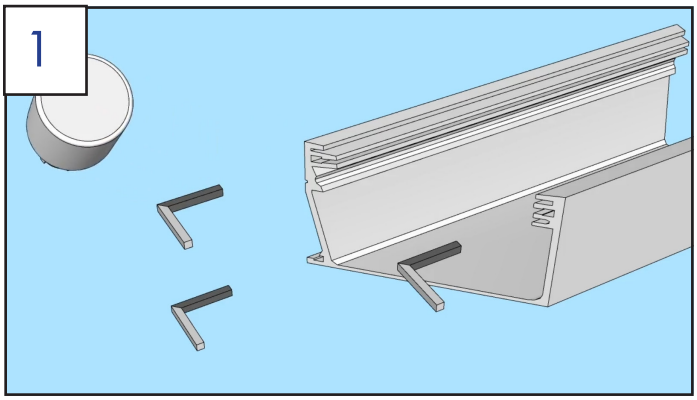

- Test fit joint to ensure accuracy before installing pins.
- Apply 2P-10 Adhesive to one half of 3 90° pins, and slide the pins halfway into the pin grooves on gutter.

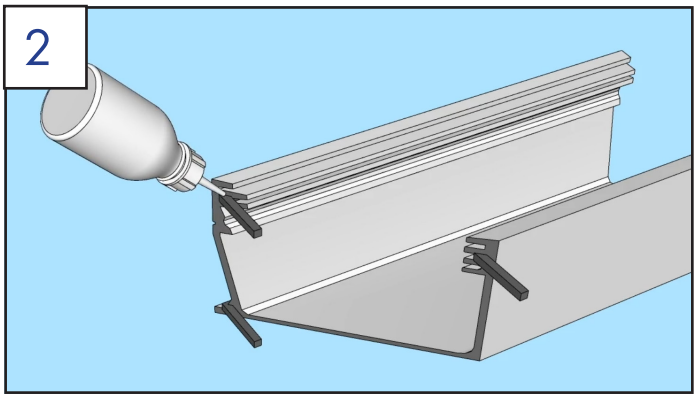

- Apply 2P-10 Adhesive to other half of pins and the edge of one gutter. Slide joint together.
- Clean any excess glue from outside surface of gutter with acetone rag immediately.

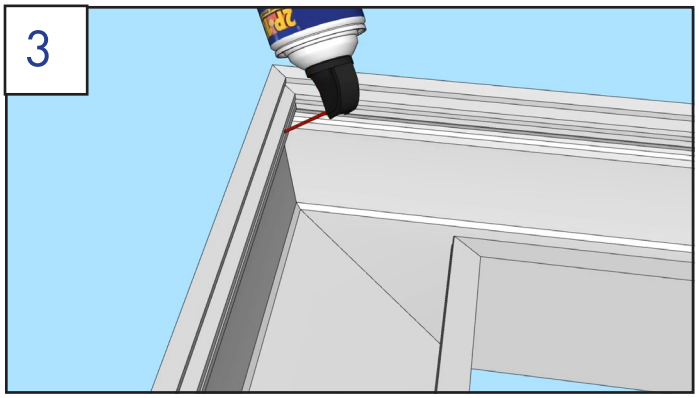

- Hold joint together and spray pins with 2P-10 Activator to instantly cure glue. If more working time is desired (approx. 5 mins), do not use Activator.
- Do not spray Activator on outside surface of gutter, as it can permanently stain the finish.
- Before applying tape, ensure gutter is clean and dry. Clean with acetone rag if necessary.

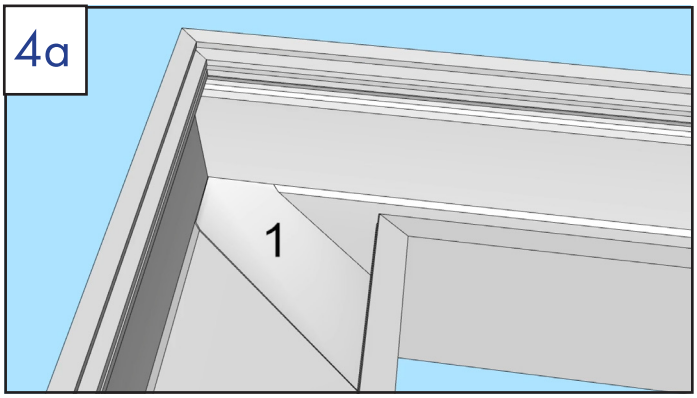

- Use tape kit labeled “INSIDE MITER”.
- Install 1st piece of tape, starting at inside corner.
- Peel a small amount of tape backing at a time, carefully stick tape, and apply pressure with fingers to remove any air bubbles.
- If temperature is below 35° F / 1.6° C, apply a small amount of 2P-10 Adhesive under edges of tape.

CONTINUED ON NEXT PAGE

Making Inside Miters (Continued)

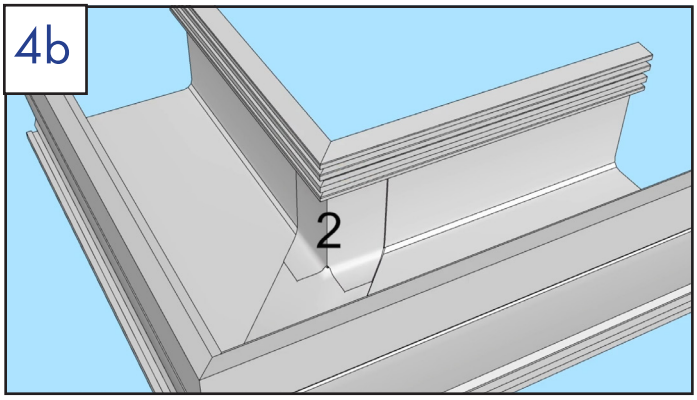

- Install 2nd piece of tape on front of joint.

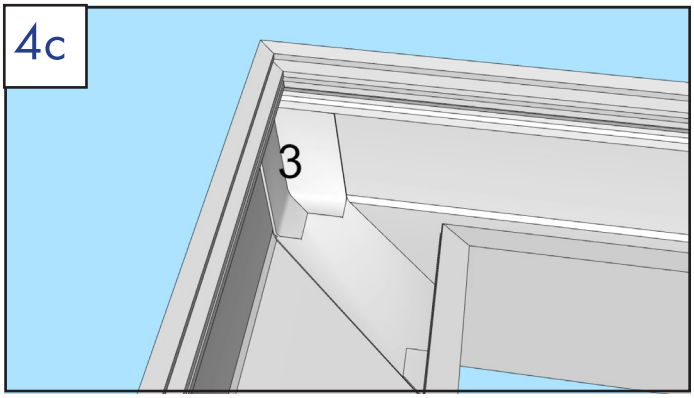

- Install 3rd piece of tape on back of joint.

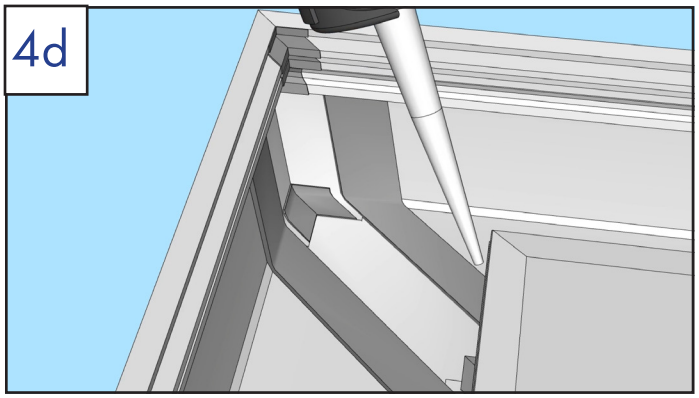

- Apply sealant as shown by shaded areas in illustration (in grooves above tape, over all tape edges).

NEXT: OUTSIDE MITERS

Making Outside Miters

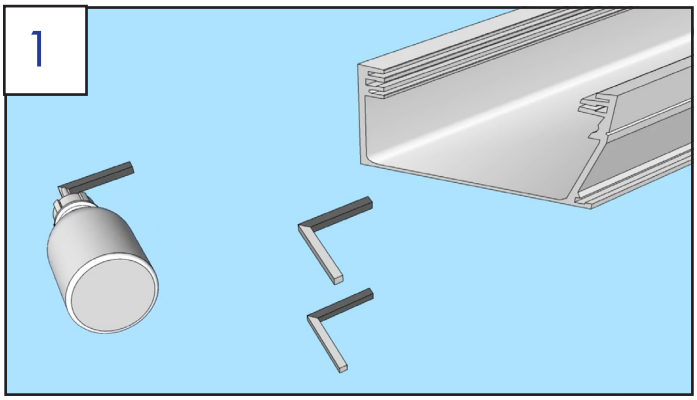

- Test fit joint to ensure accuracy before installing pins.
- Apply 2P-10 Adhesive to one half of 3 90° pins, and slide the pins halfway into the pin grooves on gutter.

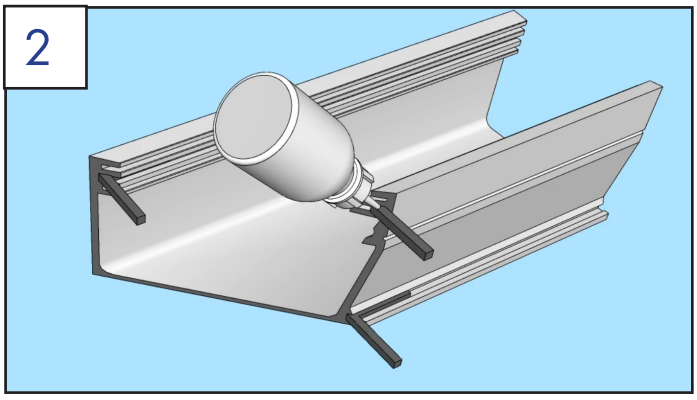

- Apply 2P-10 Adhesive to other half of pins and the edge of one gutter. Slide joint together.
- Clean any excess glue from outside surface of gutter with acetone rag immediately.

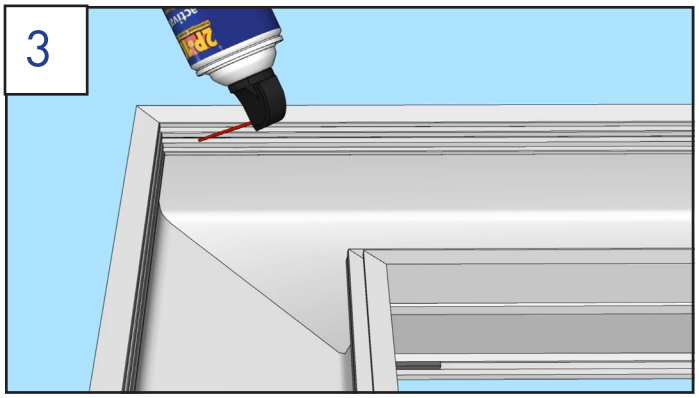

- Hold joint together and spray pins with 2P-10 Activator to instantly cure glue. If more working time is desired (approx. 5 mins), do not use Activator.
- Do not spray Activator on outside surface of gutter, as it can permanently stain the finish.
- Before applying tape, ensure gutter is clean and dry. Clean with acetone rag if necessary.

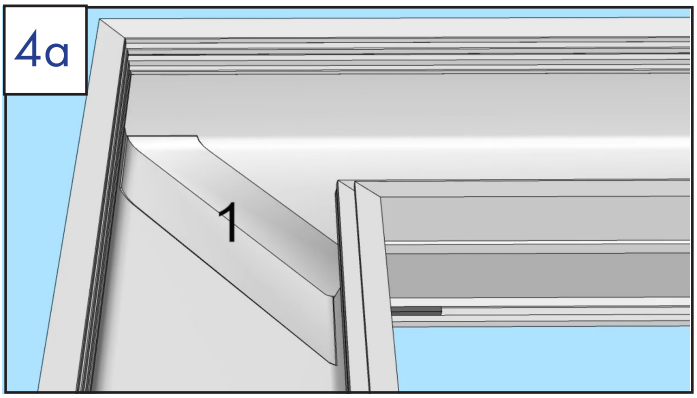

- Use tape kit labeled “OUTSIDE MITER”.
- Install 1st piece of tape starting at outside corner.
- Peel a small amount of tape backing at a time, carefully stick tape, and apply pressure with fingers to remove any air bubbles.
- If temperature is below 35° F / 1.6° C, apply a small amount of 2P-10 Adhesive under edges of tape.

CONTINUED ON NEXT PAGE

Making Outside Miters (Continued)

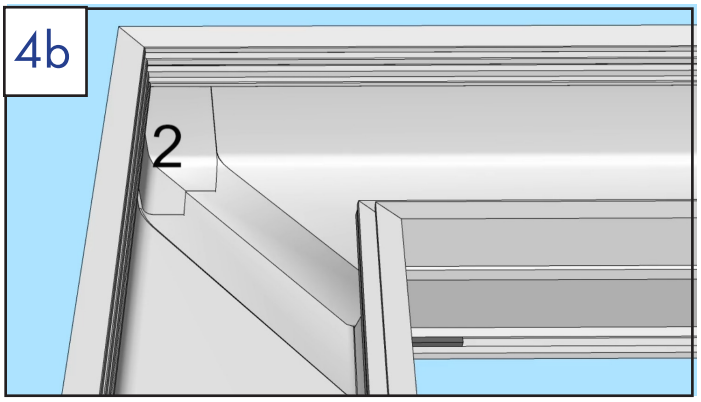

- Install 2nd piece of tape on front of joint.

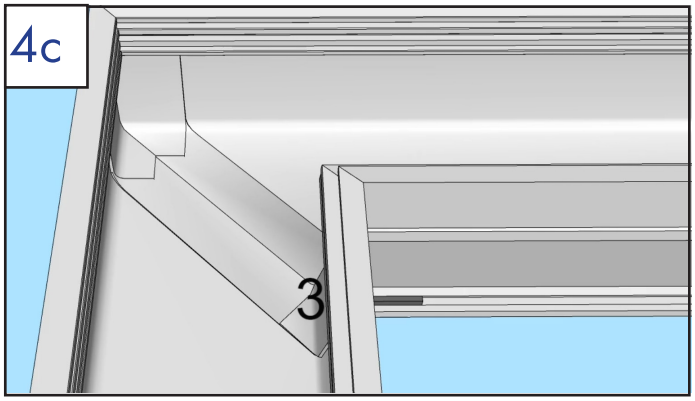

- Install 3rd piece of tape on back of joint.

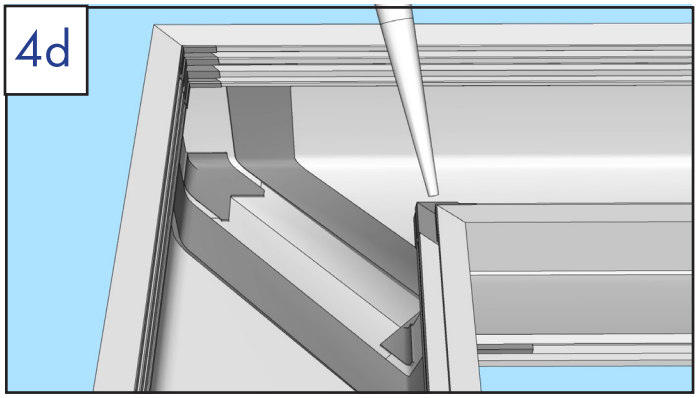

- Apply sealant as shown by shaded areas in illustration (in grooves above tape, over all tape edges).

NEXT: DOWNSPOUT OUTLETS

Installing Square/Rectangular Outlet

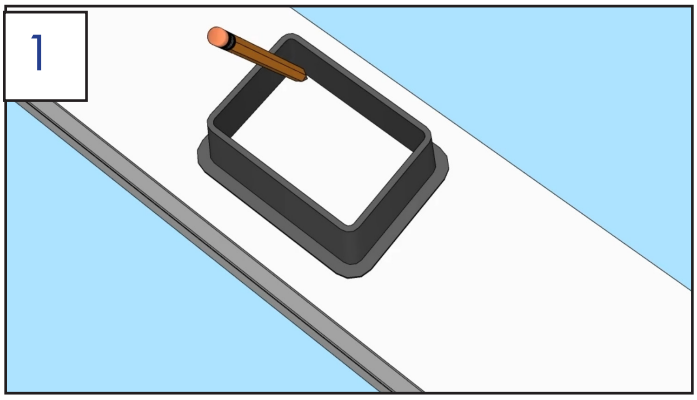

- Install outlets on the ground before installing gutter
- Trace outlet location on bottom of gutter (depends on gutter/downspout type).

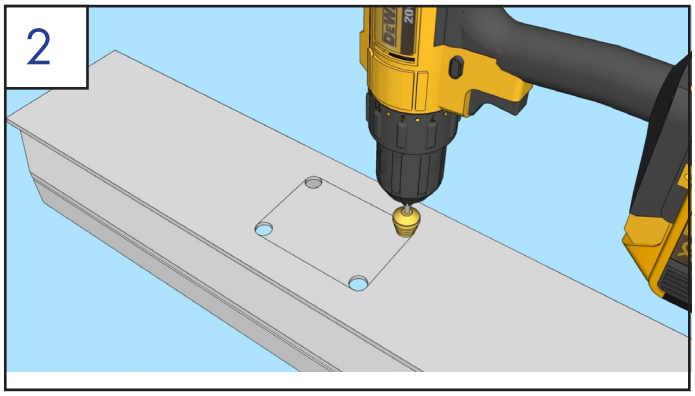

- Make cutout for outlet slightly wider than traced line to account for thickness of outlet.
- Drill holes in corners of traced area.

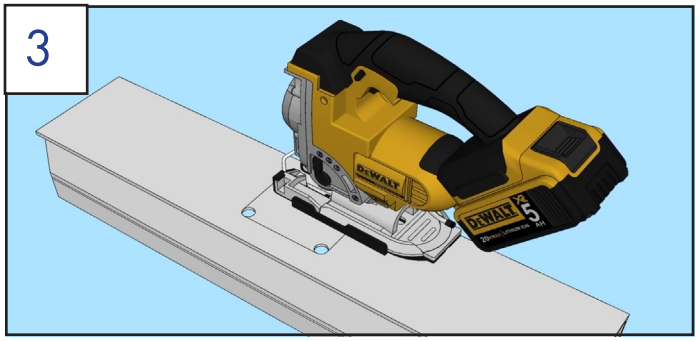

- Cut between holes with jigsaw (cover jigsaw base with tape to avoid scratching gutter).

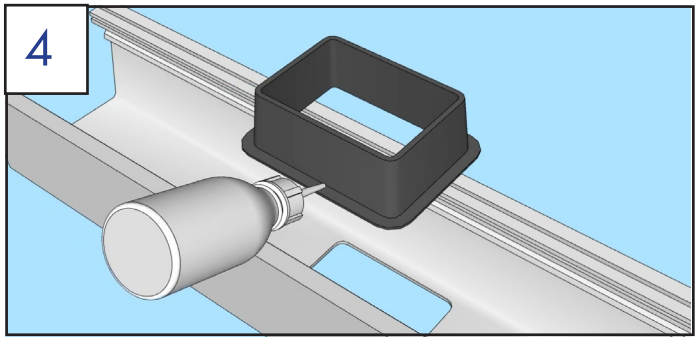

- Apply 2P-10 Adhesive to bottom lip of outlet and insert outlet in gutter.
- Spray perimeter of hole with 2P-10 Activator.

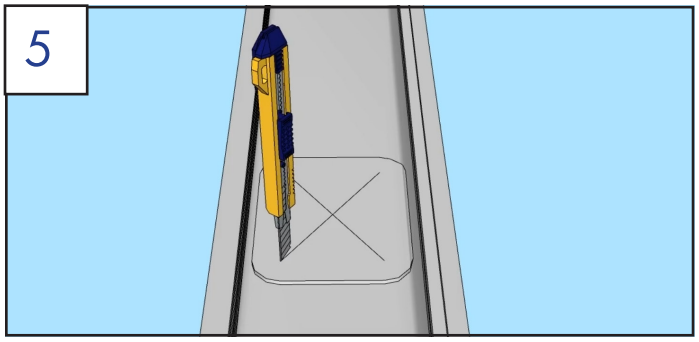

- Before applying tape, ensure gutter is clean and dry. Clean with acetone rag if necessary.
- Apply rectangular piece of tape over whole outlet, cut X in middle, and fold edges of tape into outlet.

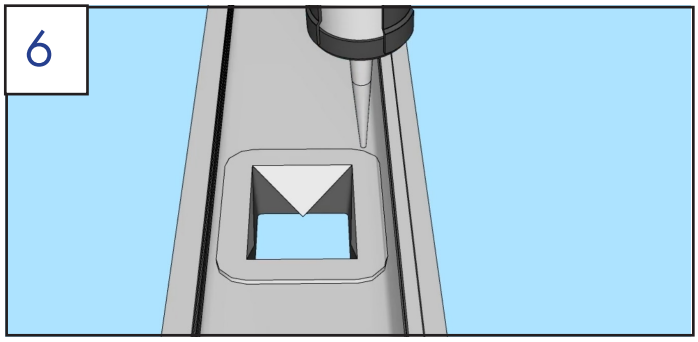

- Apply Dicor sealant over edges of tape.

NEXT: INSTALL END CAPS

Installing End Caps

1

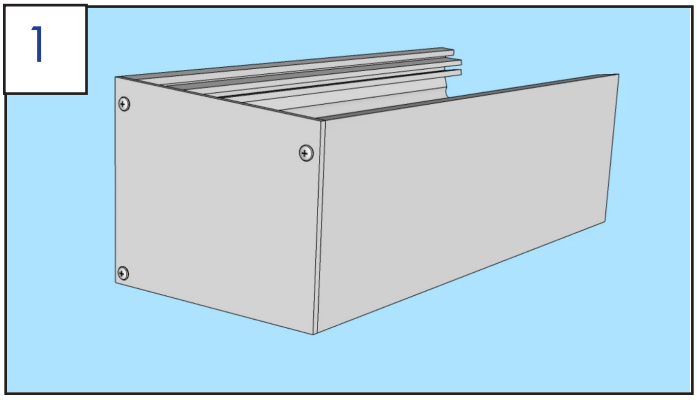

- ⅛” thick aluminum end caps are used where the end of a gutter is exposed. End cap screws are included with each end cap.
- They have countersunk holes on each side, so there are no “lefts” or “rights”. They screw into the internal grooves in the gutter.

2

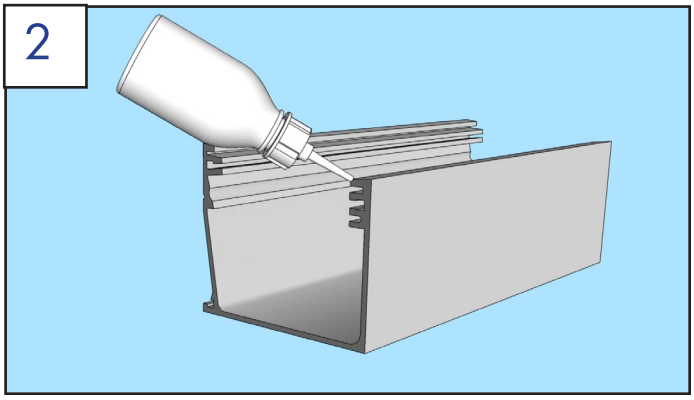

- Apply 2P-10 Adhesive to edge of gutter.

3

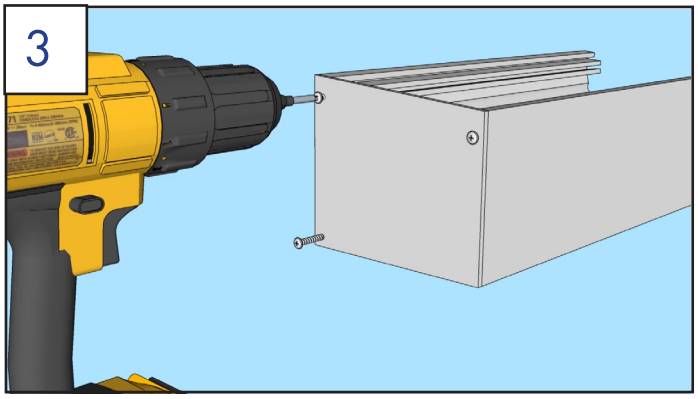

4

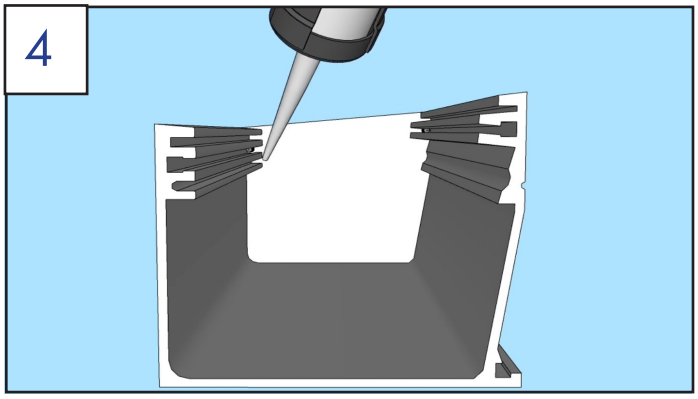

- Apply sealant to the inside of end cap, including in grooves in gutter.

NEXT: INSTALL INTERNAL PLUGS

Installing Internal Plugs

1

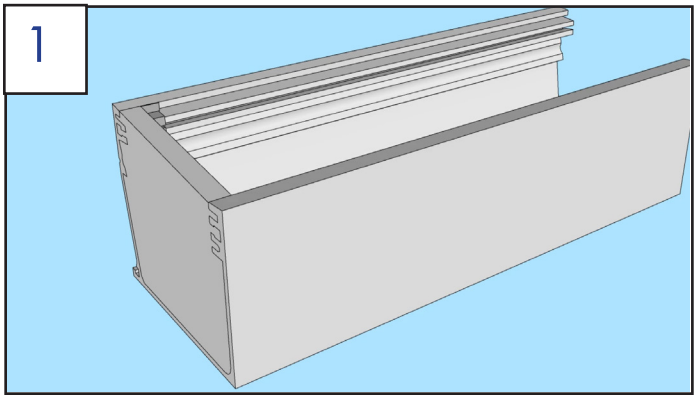

- PVC internal plugs seal off the gutter where it butts into a wall or piece of trim. They fit inside the gutter and are flush with the outside.
- Do not use where end of gutter is exposed - use end cap instead.

2

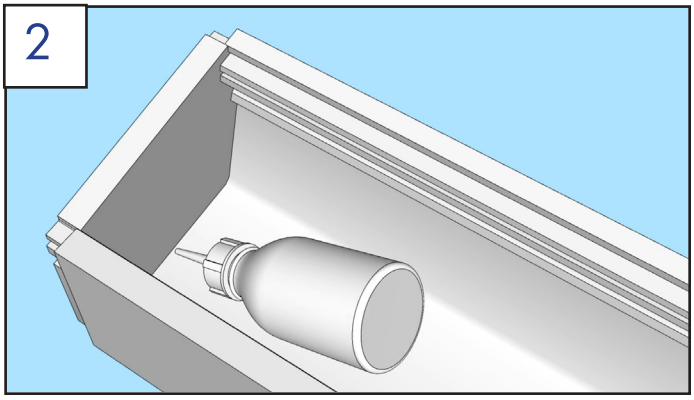

- Insert plug 1/8” into gutter, taking care to align the edges.
- Apply 2P-10 Adhesive to the inside of the gutter next to the plug.

3

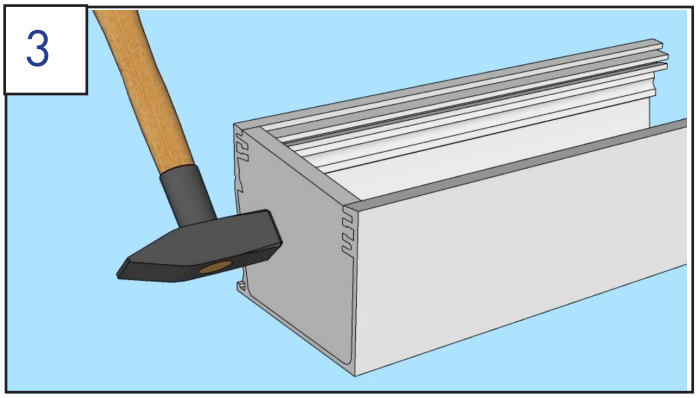

- Tap the plug flush with the end of the gutter.

4

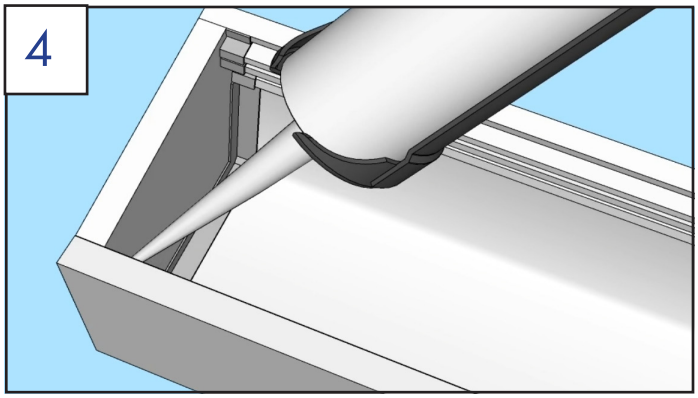

- Apply sealant to inside of plug, including the grooves in gutter.

NEXT: ATTACH GUTTER TO FASCIA

Attaching Gutter to Fascia

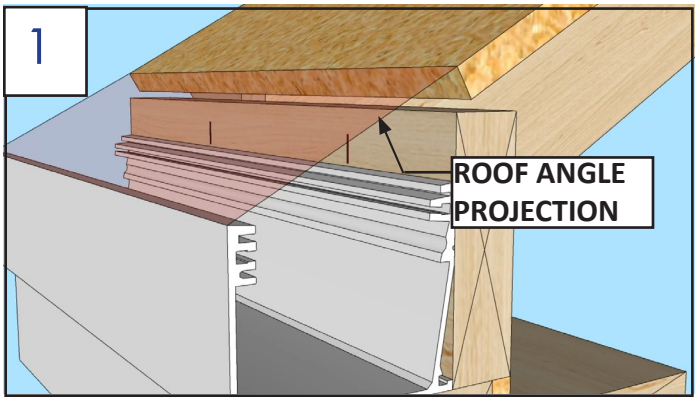

- If applicable, mark rafter locations on fascia.
- Set gutter into place on build-out or temporary blocks.
- On sloped roofs, outside top lip of gutter should align with projection of angled roof plane.

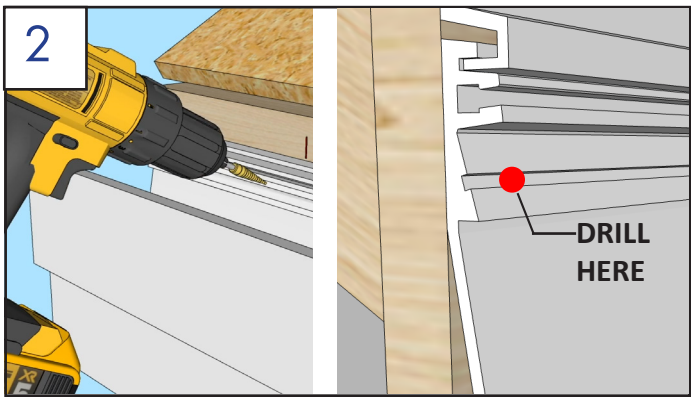

- Drill a 7/16” hole centered on the angled shelf inside gutter.

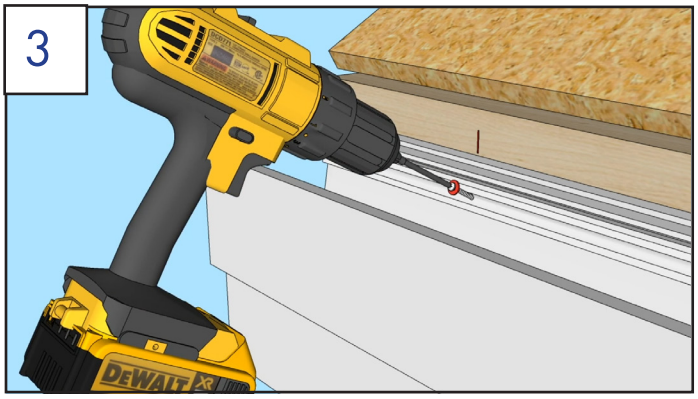

- Install screws with washers. Tighten until washer is slightly compressed. Do not overtighten.
- Use one screw per rafter. If there is a structural sub-fascia, place screws at 16” intervals.

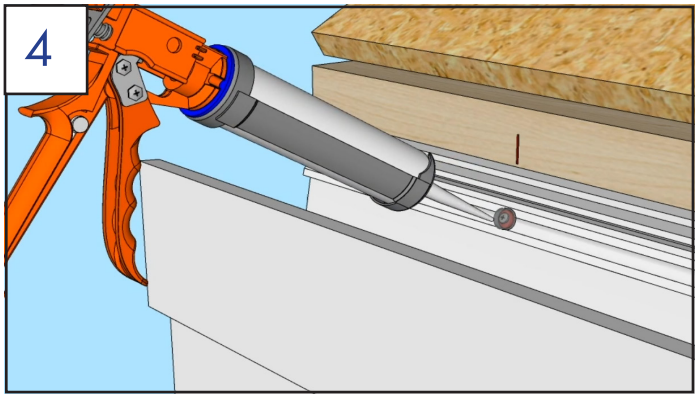

- Cover the screw head and washer with sealant.

NEXT: INSTALL
INTEGRAL FLASHING

Installing Integral Flashing

(Note: OG profile shown here. Process to install flashing is the same on SQ/TL profiles.)

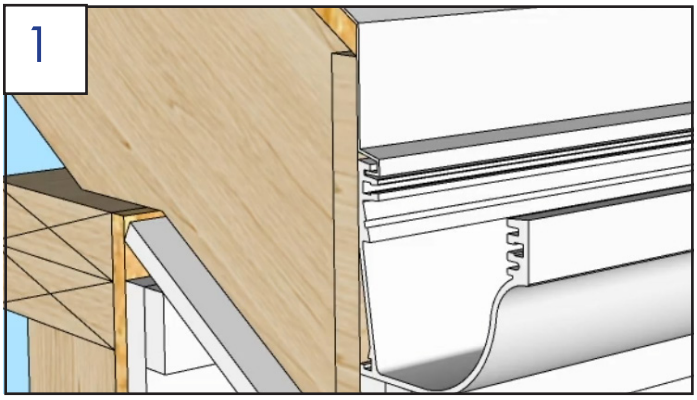

- Pre-bent edge of metal flashing fits into top groove inside gutter. Flashing should be installed over waterproof roof membrane layer (not pictured), and then taped to seal joint between membrane and flashing.

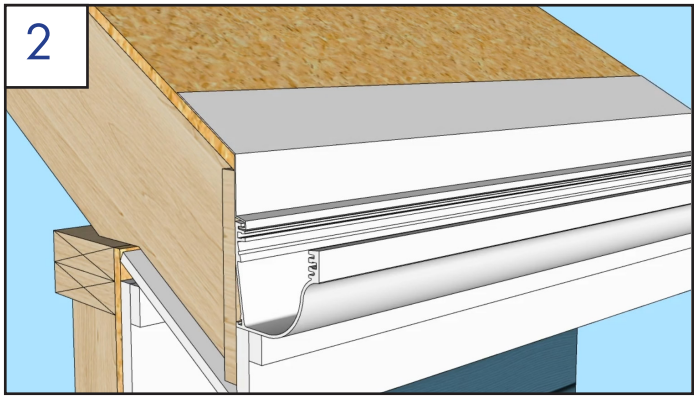

- Bend the upper part of the flashing to the proper roof angle (or specify the angle and have us bend it for you).

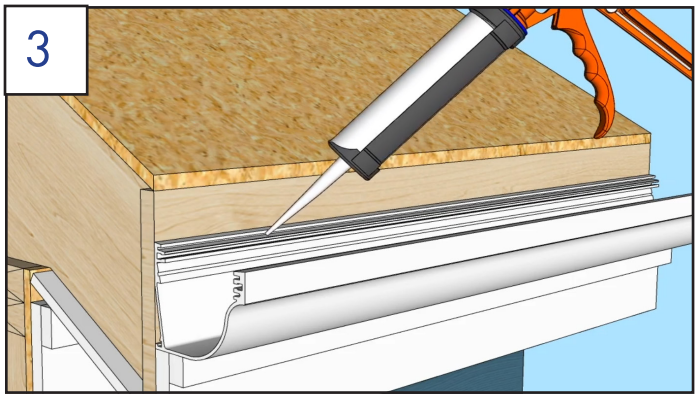

- For extra protection against ice dams, apply sealant in the top groove before installing flashing.

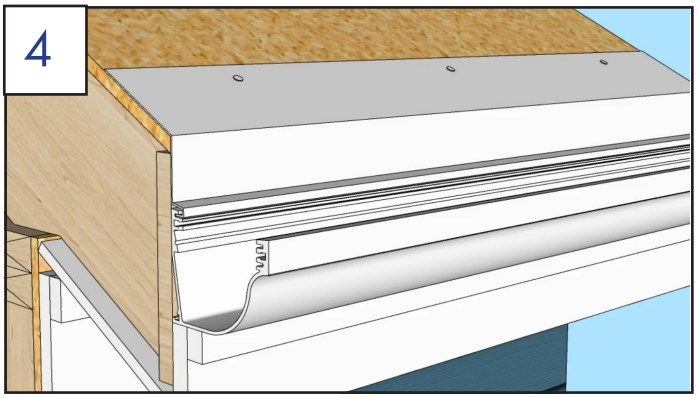

- Install flashing in top groove inside gutter and nail to roof. Each piece of flashing should overlap adjacent pieces by 3”.

NEXT: INSTALLING PVC LEAFGUARD

Installing PVC Leafguard

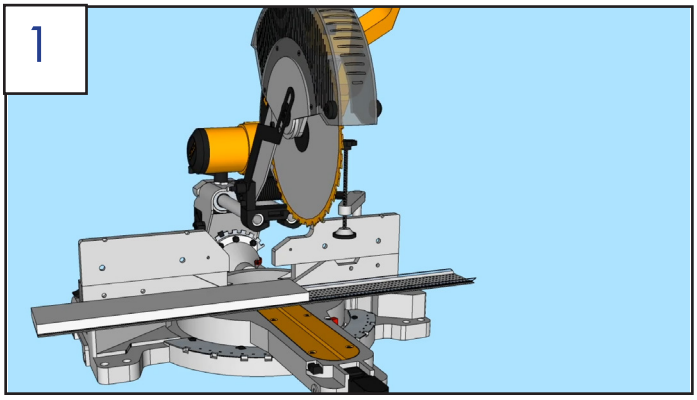

- Where necessary to cut leafguard, measure and mark piece, place wood block over leafguard and hold securely.
- Cut through wood block and leafguard with miter saw.

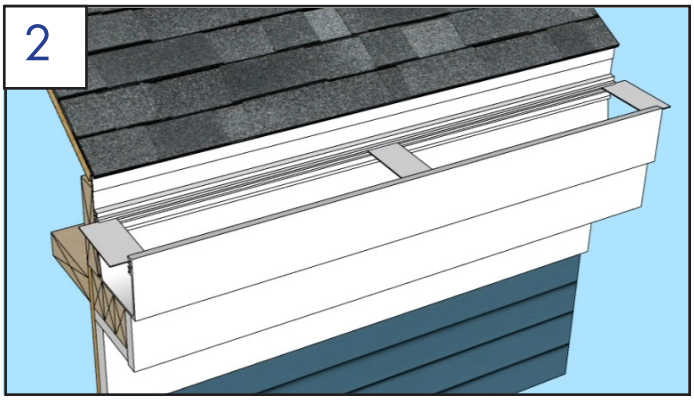

- Install supplied leafguard supports at each end of leafguard, and in middle. See below image for correct grooves in gutter.

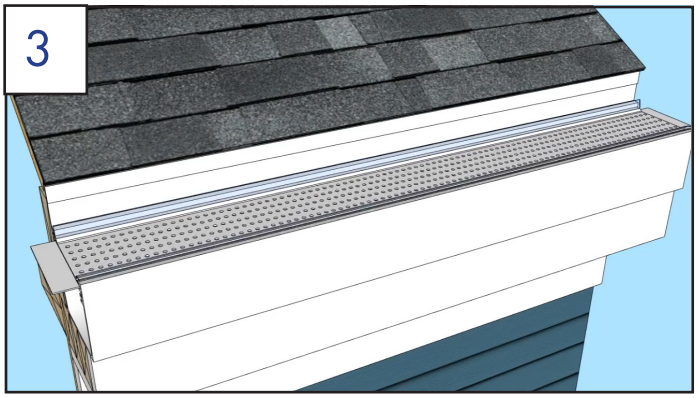

- Install leafguard by pushing it into the back groove first, then snapping it into the front groove.

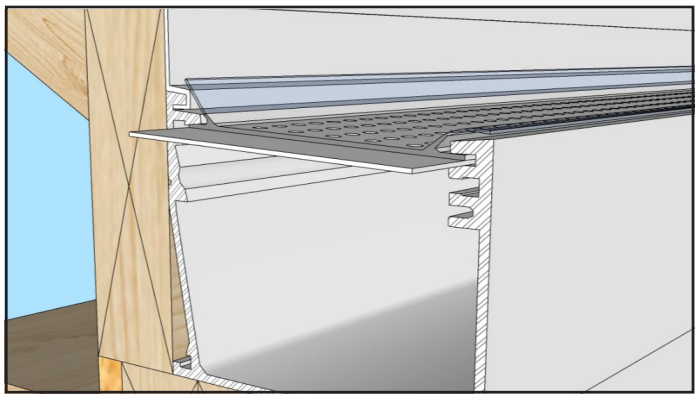

Installing Stainless Micro-Mesh Leafguard

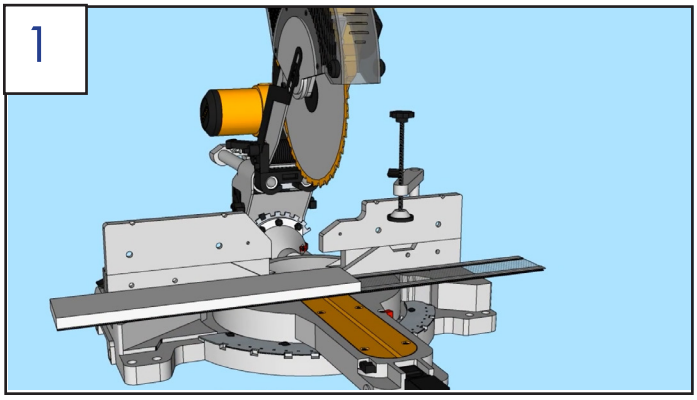

- Where necessary to cut leafguard, measure and mark piece, place wood block over leafguard and hold securely.
- Cut through wood block and leafguard with miter saw.

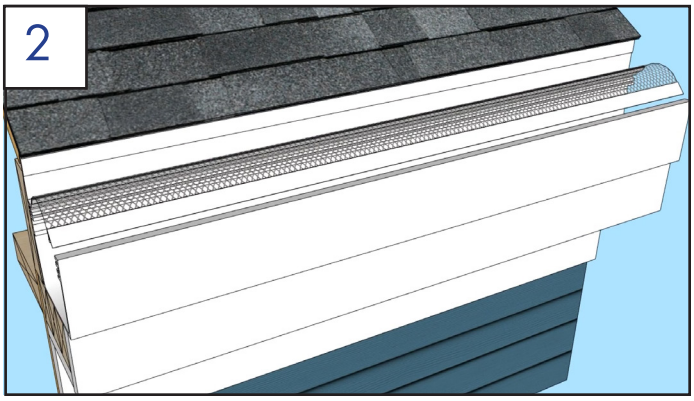

- Bend the leafguard up slightly in the middle of the mesh, so it can fit inside the grooves in the gutter.

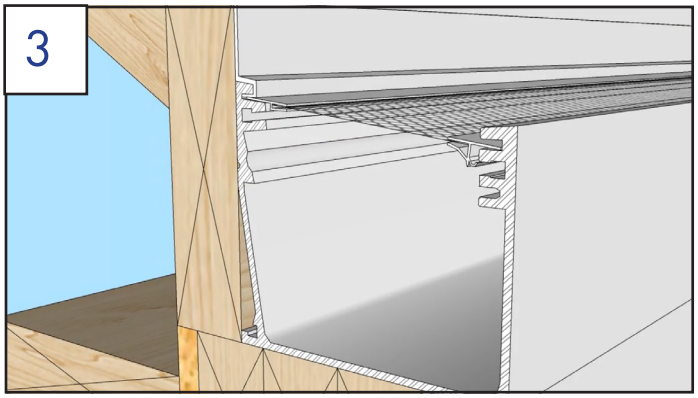

- Insert leafguard into gutter and flatten out, so it fits tightly into grooves.
- Side of leafguard with hook below mesh is oriented toward front of gutter.